Display power supply

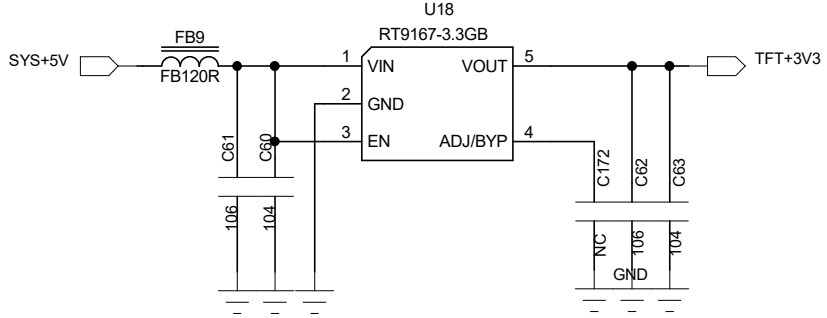

Screen backlight circuit

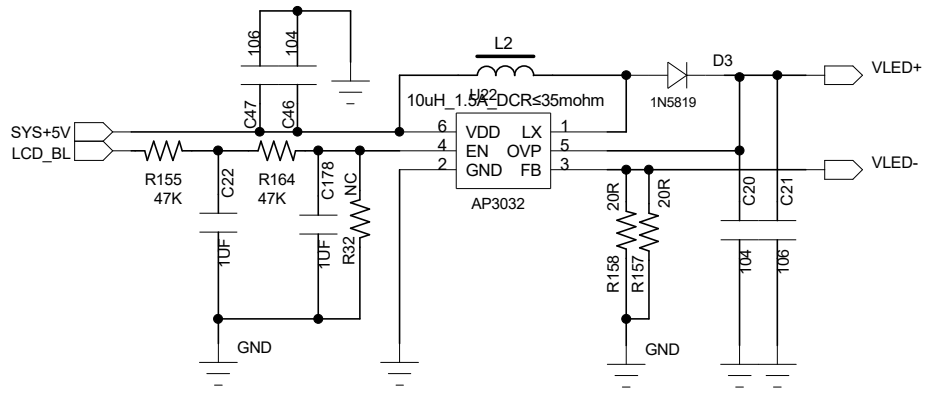

Display interface

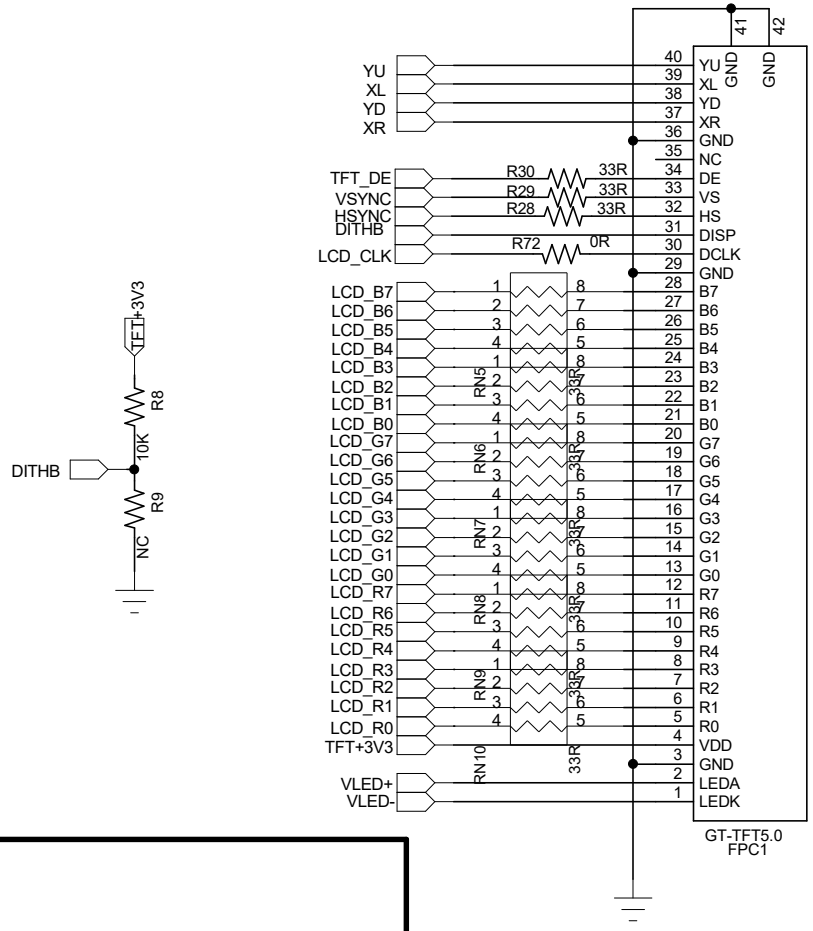

TOUCH

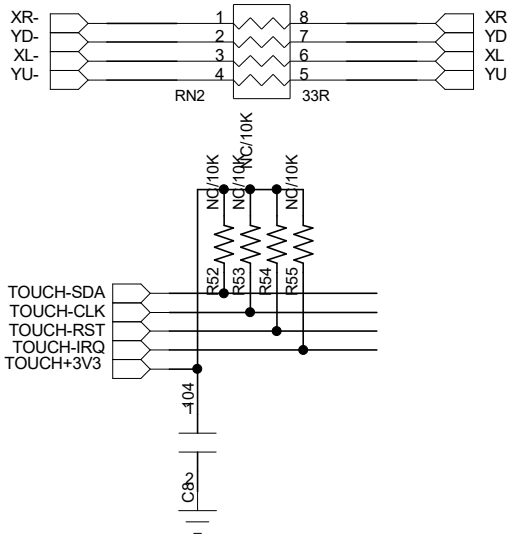

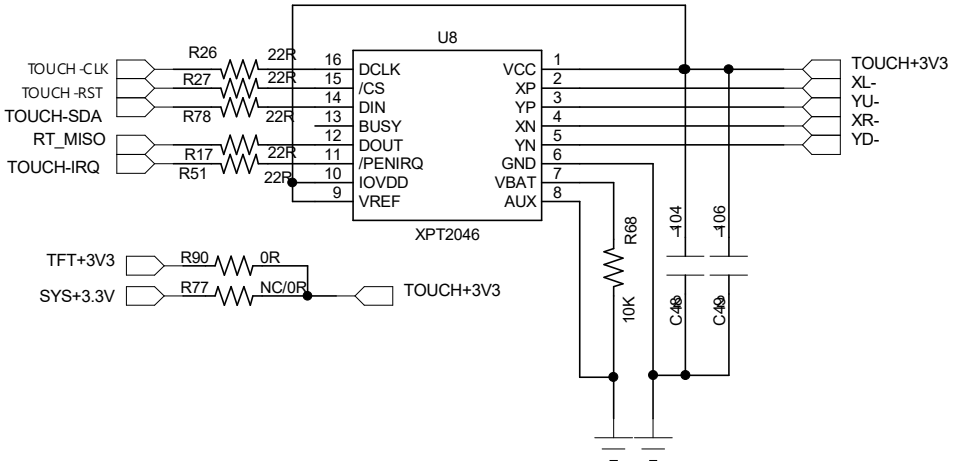

Shenzhen Genitop Semiconductor Co., Ltd			
Project:	GT-4.3"serial screen module circuit diagram		
File:			
Date:	2023-03-27	Rev:	V1.0
Designed by:	HGL	Sheet:	4 of 5